Manufacturing and installation instruction

Oliva®

Folding arm awning twin-tube cassette

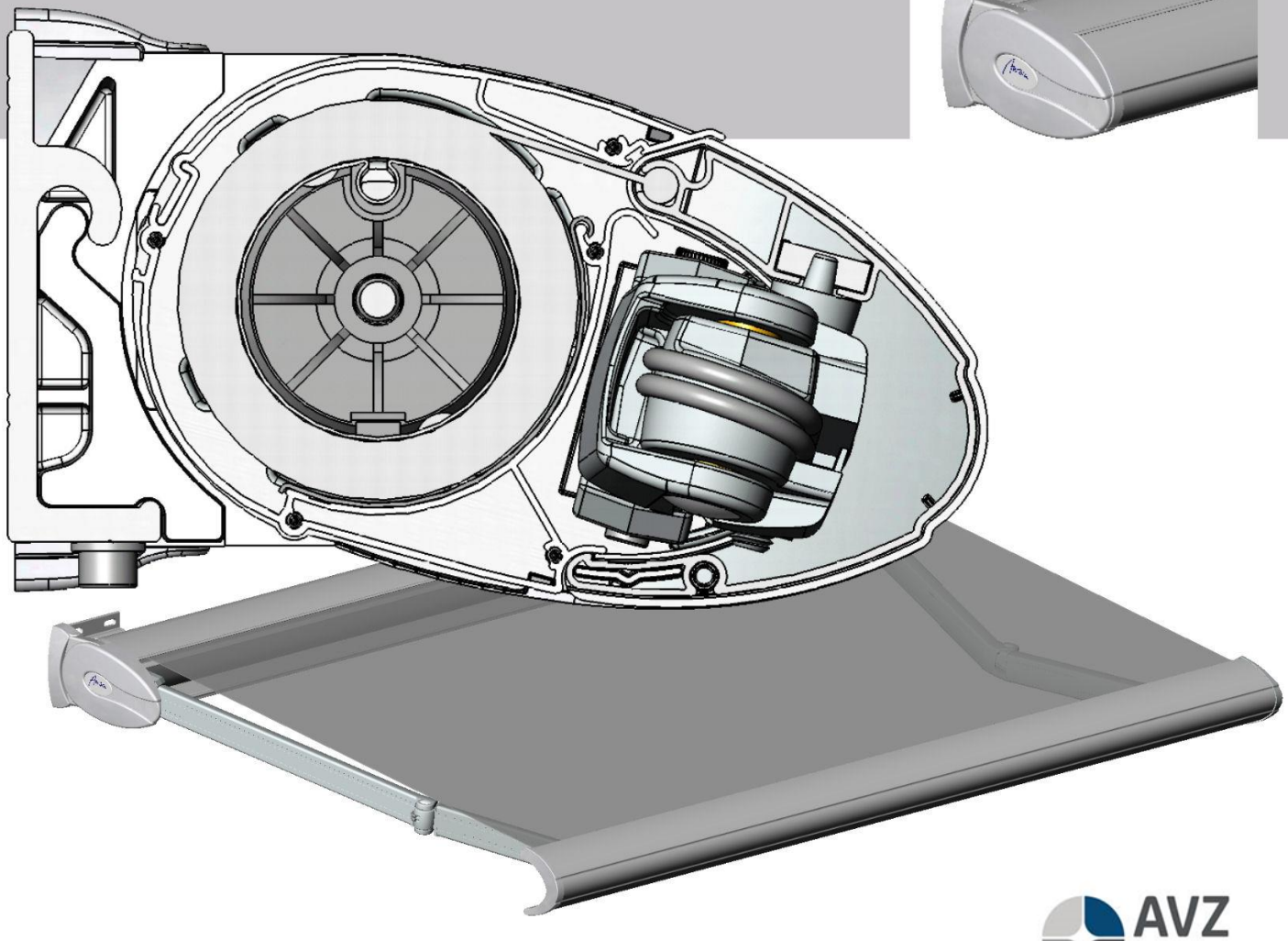

* * A T T E N T I O N * *

AVZ accepts no liability for any mistakes
that may appear in this manual,
nor for any damages ensuing from its use.

General information folding arm awning Oliva®

Dimensions (cm)

When extended:	150	200	250	*250**	300	*300**	*350**
Maximum width	650	650	650	650	650	650	600
Minimum width	188	245	302	279	359	329	383

** = arms with equivalent sections.* Use these arms only, in the event that this is necessary to achieve the smallest possible width. If these arms are used for larger widths, then inappropriate distribution of the forces may occur. This may cause the front frame to bow. Furthermore, the front section of the folding arm may protrude too far, thus causing the front frame to hang too low.

Minimum and maximum angle

	Wall mounting	Ceiling mounting
Motor operation	approx. 5° to 50°	approx. 20° to 90°
Gear box operation	approx. 5° to 15°	approx. 20° to 30°

Method of rolling up cloth

The cloth on the Oliva® folding arm awning is rolled from the top.

Shortening dimensions

Overall width minus the indicated figures (mm) unless otherwise stated.

Means of operation:		Gear box	ASA motor	Somfy motor
Top cover		97 mm	97 mm	97 mm
Synthetic seal		97 mm	97 mm	97 mm
Bottom cover		96 mm	96 mm	96 mm
Synthetic insert drain		96 mm	96 mm	96 mm
Front frame		109 mm	109 mm	109 mm
Tube 78		162 mm	145 mm	145 mm
Cloth		200 mm	180 mm	180 mm

Motor programme

When extended:	150	200	250	300	*350*
from 188 to 250 cm inc.	25 Nm				
from 251 to 280 cm inc.	25 Nm	30 Nm			
from 281 to 340 cm inc.	25 Nm	30 Nm	40 Nm		
from 341 to 400 cm inc.	25 Nm	30 Nm	40 Nm	50 Nm	
from 401 to 500 cm inc.	25 Nm	30 Nm	40 Nm	50 Nm	50 Nm
from 501 to 600 cm inc.	30 Nm	35 Nm	50 Nm	50 Nm	50 Nm

Technical drawing

A technical drawing of the Oliva is included in the appendix.

Assembly instructions folding arm awning Oliva®

1. Shorten the profiles, synthetic insert drain and synthetic seal to the correct lengths (see shortening dimensions)**.**

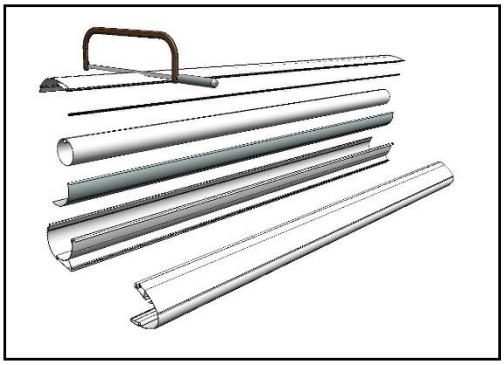

2. File the edge of cloth slot in the steel tube to facilitate smooth passage of the cloth.
3. Insert the cloth strings in the cloth and feed it through the groove in the steel tube.
4. Roll the cloth around the upper tube and fit the clamping pads.
5. Fit the bearing plug and bearing to the non-driven end of the upper tube.
6. Fit a motor to the driven end of the upper tube (if you have opted for manual operation, fit the mono plug here).

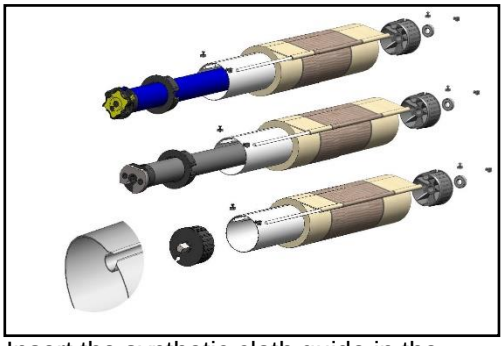

7. Insert the synthetic cloth guide in the bottom cover and secure it using the tape provided.
8. If you have opted for manual operation, then you should drill a hole in the bottom cover to accommodate the gear box. **Please note:** The min. and max. angles are somewhat restricted in the event that a gear box is fitted.

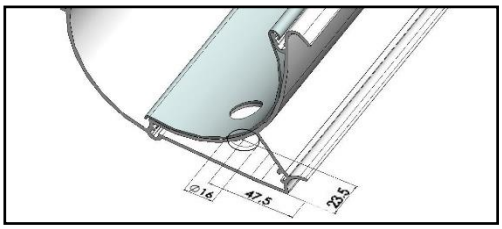

9. Lay the bottom cover on the workbench or table and fit the bearing-side mounting plate using a bearing pin and synthetic washer.
10. Lay the cloth tube containing the cloth in the bottom cover (ensure that about 25 cm of the cloth is unrolled, so that the front tube can be attached).

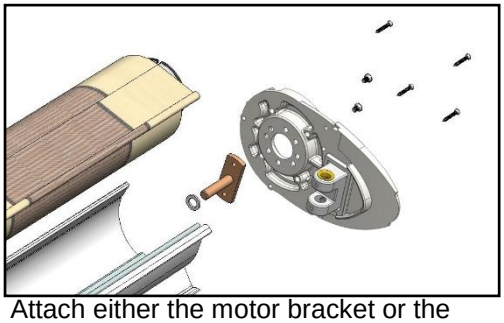

11. Attach either the motor bracket or the gear box (4000482) to the driven-end mounting plate.
12. Lift the cloth tube at the driven end and slide the mounting plate complete with the motor support or gear box onto the end of the tube. (Detach the eye from the gear box first, so that the shaft can be inserted through the hole in the bottom cover).
13. Next, attach this mounting plate to the bottom cover also.

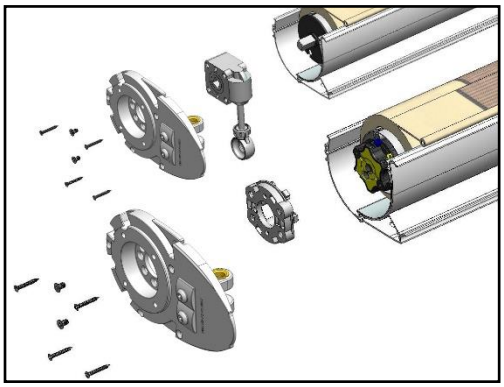

14. Fit the top cover supports to the awning. You can now decide on the angle of incline you require (5-35°, 35-50° or ceiling mounting). Final adjustments can be made once everything is in place.

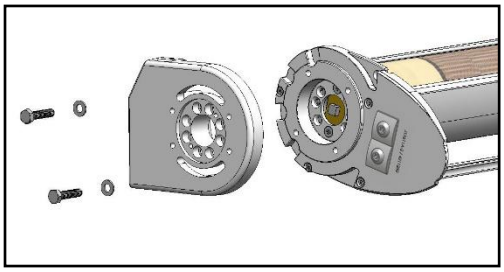

15. In the case of installation on a lift or wall: Fit the wall brackets and then insert the awning. In the case of installation without a lift: Place the entire unit on a workbench or table and continue as follows (adjustment can be carried out later).

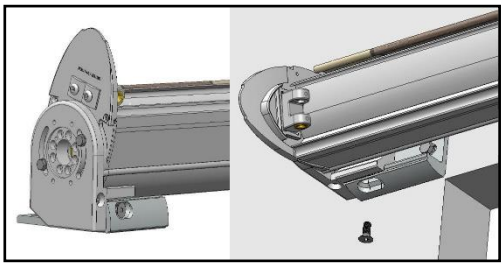

16. Fit the arm awning with the dowel pin to the top cover supports.
17. Adjust the arm with the dowel pin, so in closed position it is situated between the cassette.
18. Fix the dowel pin with the adjusting bolt.

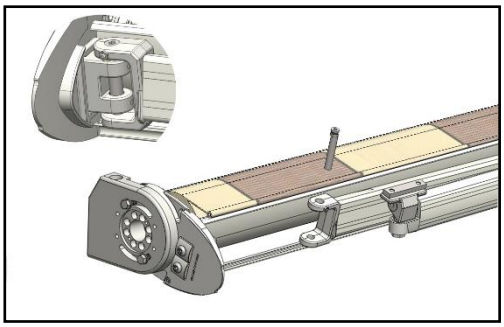

19. File the groove in the front frame in and slip the front frame over the cloth.
20. Now, secure the clamping pads.

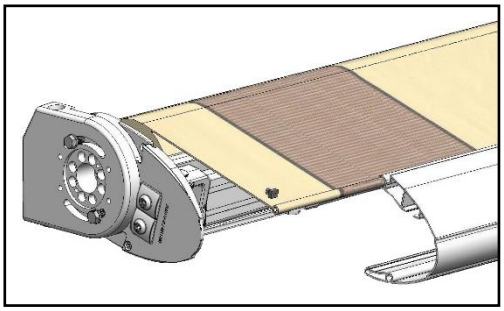

21. Lay the front frame on the awning (or in the event of installation, on a workbench or table near the awning) temporarily.
22. Remove the safety tape from the arms, and replace it with a piece of string, enabling the arms to extend approx. 25 cm.
23. Loosen the bolts in the front frame joint, so that it becomes flexible.
24. Detach the mounting strip from the front frame joint and slide it into the front frame.

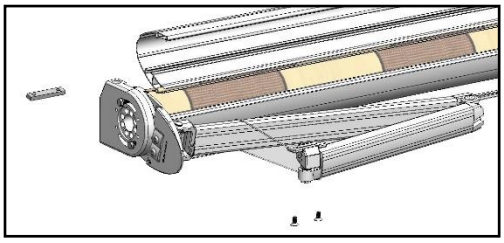

25. Fit the front frame to the arms secure them using the mounting strips. Extend the entire unit, placing the front frame in a central position between the mounting plates. The exact installation position is reached when the closed arms are situated loosely between the front frame and cassette.
26. Extend the front frame until it follows the contour of the mounting plate, then secure it. Tighten bolt No.1 first, then secure it by tightening No. 2 (see diagram below).

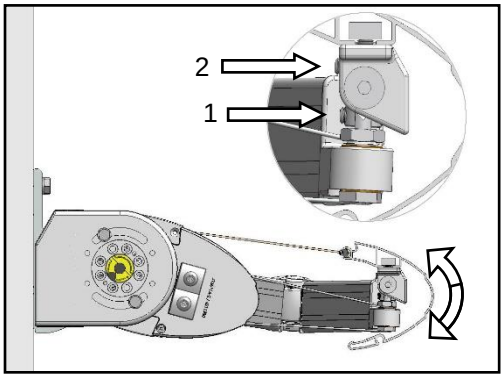

27. In the case of motor operation: Drill a ∅10mm hole in the top cover. Fit a cable grommet and feed the cable through. Ensure that the cable loops round beneath the motor, to prevent moisture from running along the length of the cable and into the motor.

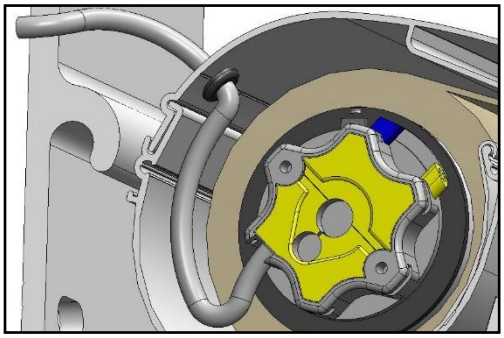

Assembly instructions folding arm awning Oliva®

28. Next, insert the synthetic sealing strip in the top cover, and hook the top cover into the bottom cover. Secure the cover at either end.

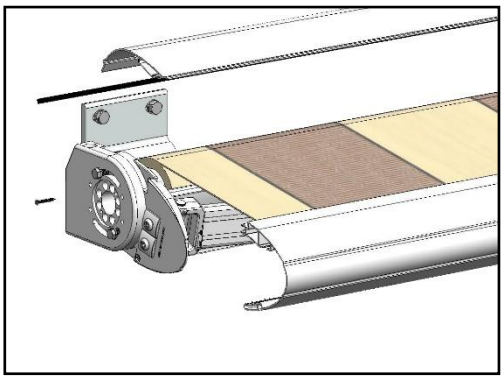

29. Fit the small covers to either end of the front frame. These covers click into the profile.
30. If you have already set the required angle of incline, then you can now align the angle of the large end covers by removing one or more ribbed sections with a sharp blade.
31. Fit the end covers, or fit them later (if you are afraid of damaging them during transportation).

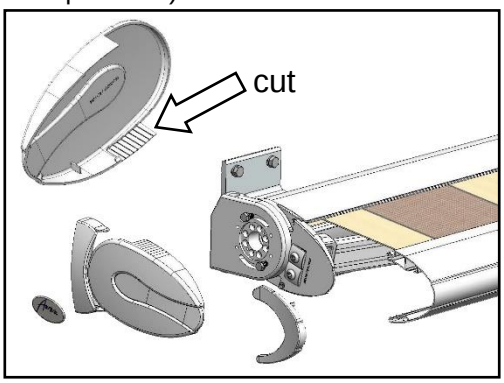

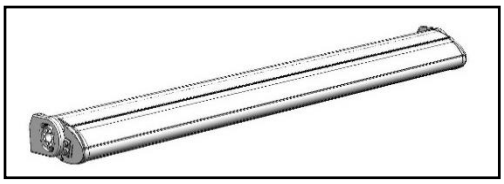

32. Enclose (wherever applicable) the middle support; loose end covers; wall brackets, bolts and any other fixing materials required.
33. The mounting plate* dimensions depend on the circumstances in which the awning is to be used. (if in doubt, consult a structural engineer).

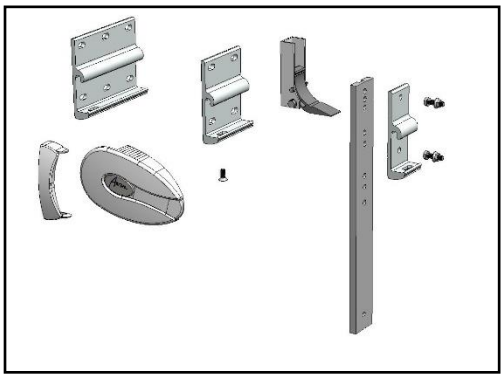

Assembly instructions twin-tube Oliva® folding arm awning

1. Before proceeding to install the awning, establish that the existing structure is suitable to bear the ensuing forces. (If in doubt, consult a structural engineer).
2. Make sure that the mounting materials you have chosen are suitable for the wall and folding arm awning in question. (If in doubt, ask your fixing materials supplier for advice).
3. Measure up and mark off the holes for the wall brackets and middle bracket chosen.
4. Drill the holes in the wall.
5. **Please note**: In the event that '*mounting plates for 1st series models*' are used, the hole for the middle support should be drilled level with the top holes for the mounting plates. In the event that '*mounting plates for 2nd series models*' are used, then the hole for the middle support should be level should be drilled 30 mm below the level of the top holes for the mounting plates. (See Appendix for further details). Fit the middle support after the awning has been installed.
6. Fit the wall brackets, ensuring that they are placed level against the wall. Align then separately.

7. In the case of electrical operation: Drill a hole through the wall for the wiring.
8. Hook the folding arm awning into the mounting plates on the wall.

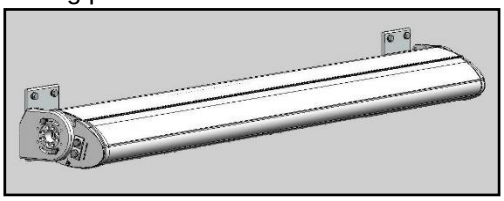

9. Tighten the bolts in the mounting plates to secure the awning.

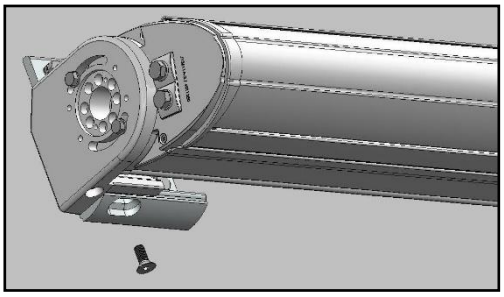

10. Insert the crank handle in the gear box or connect the motor. Observe the instructions in the installation manual supplied with the motor, and always extend the awning completely.
11. Adjust the angle of the awning as required by loosening the bolts in the top cover supports slightly. Next, adjust the socket-head bolt on the underside. (Tip: the bolt will turn more smoothly if the front frame lifted). Once the appropriate angle has been reached, secure the bolts in the top cover supports once more.

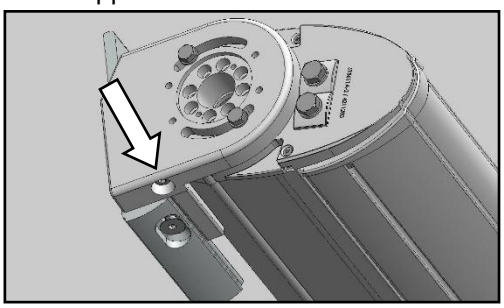

12. Fit the middle support, ensuring that the top cover is not sagging.

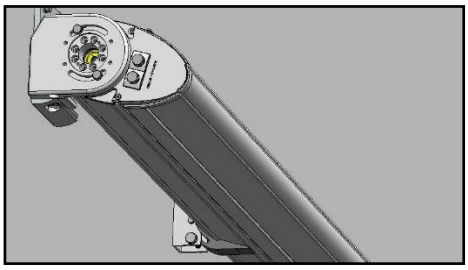

13. In the case of electrical operation: Feed cable through wall and connect. Next, adjust the motor following the instructions in the manual supplied.

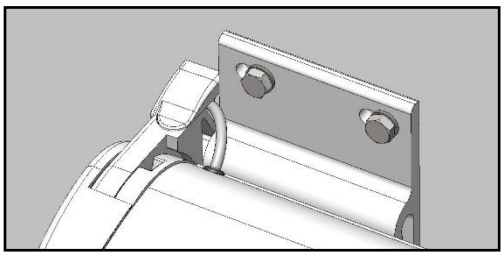

14. Align the angle of the end covers by removing one or more ribbed sections with a sharp blade.
15. Fit the end covers.

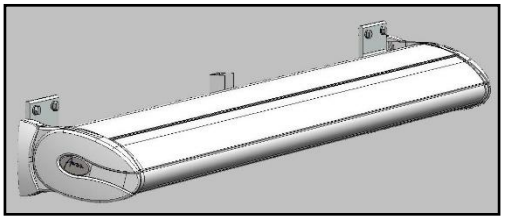

Appendix twin-tube Oliva® folding arm awning

Mounting plates

Narrow 70 mm	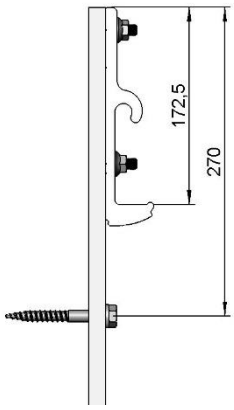 4211275
	Installation in combination with the steel wall strip only.
Standard 140 mm	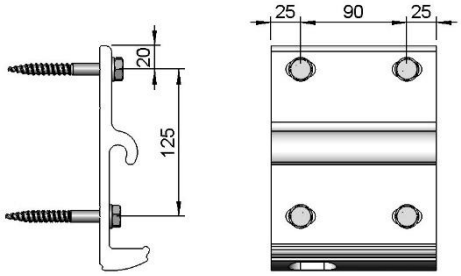 4211276 (L drawing)/ 4211277 (R)
	Applicable in most situations
Wide 230 mm	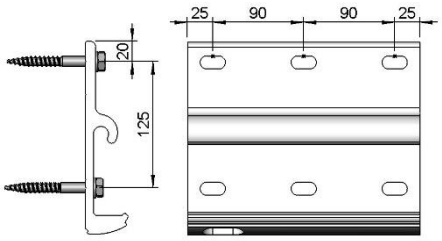 4211278 (L drawing)/ 4211279 (R)
	When additional fixing points are required.

PLEASE NOTE: Always ensure that the fixing materials used are suitable for the wall and folding arm awning in question (If in doubt, ask your fixing materials supplier for advice).

Appendix Twin-tube Oliva® folding arm awning

Technical drawing (NL) (2nd series wall-mounted model – Somfy motor)

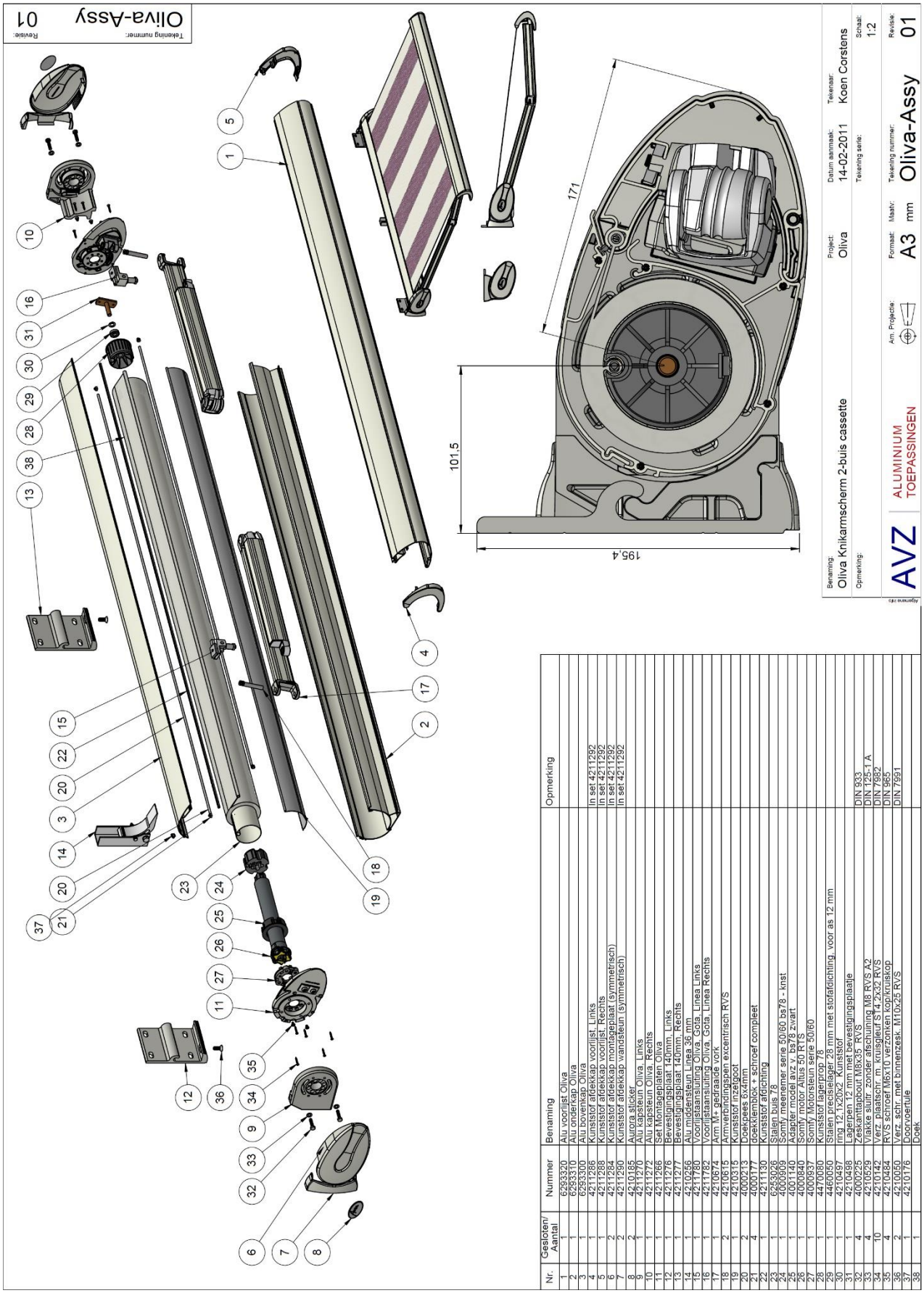

Nr.	Gesloten/ Aantal	Nummer	Benaming	Opmerking
1	1	6293320	Alu voorlijst Oliva	
2	1	6293310	Alu onderkap Oliva	
3	1	6253330	Aluprofiel 40x40	
4	1	4211286	Kunststof afdekkap voorlijst, Links	
5	1	4211288	Kunststof afdekkap voorlijst, Rechts	
6	2	4211284	Kunststof afdekkap montageplaat (symmetrisch)	in set 4211292
7	2	4211290	Kunststof afdekkap wandsteun (symmetrisch)	in set 4211292
8	2	4210185	Aurora sticker	in set 4211292
9	1	4211270	Alu kapsteun Oliva, Links	
10	1	4211272	Alu kapsteun Oliva, Rechts	
11	1	4211266	Set Montageplaten Oliva	
12	1	4211276	Bevestigingsplaat 140mm, Links	
13	1	4211277	Bevestigingsplaat 140mm, Rechts	
14	1	4210256	Alu middensteun Linea 36 mm	
15	1	4211780	Voorlijstaansluiting Oliva, Gota, Linea Links	
16	1	4211782	Voorlijstaansluiting Oliva, Gota, Linea Rechts	
17	1	4210674	Arm M+ gedraade vork	
18	2	4210615	Armverbindingspen excentrisch RVS	
19	1	4210613	Kromoor 6x24mm	
20	2	4000213	Doekseis 6x24mm	
21	4	4000177	doekklemblok + schroef compleet	
22	1	4211130	Kunststof afdichting	
23	1	6253026	Stalen buis 78	
24	1	4000809	Somfy meenemer serie 50/60 bs78 - knst	
25	1	4001140	Adapter model avz v. bs78 zwart	
26	1	4000840	Somfy motor Altus 50 RTS	
27	1	4000937	Somfy Motorsteun serie 50/60	
28	1	4470080	Kunststof lagerprop 78	
29	1	4460050	Stalen precisielager 28 mm met stofafdichting, voor as 12 mm	
30	1	4210497	ring 12,1x20x2 Kunststof	
31	1	4210498	Lagerpen 12 mm met bevestigingsplaatje	
32	4	4000225	Zeskanttapbout M8x35 RVS	DIN 933
33	4	4210529	Vlakke sluitr. zonder afschuining M8 RVS A2	DIN 125-1 A
34	10	4210482	Veerz. Plastech m. kruisgeul S 14,2x22 RVS	DIN 7982
35	4	4210142	Kerfz. Plastech m. kruisgeul S 14,2x22 RVS	DIN 965
36	2	4210050	Vast. schroef binnenzesk. M10x25 RVS	DIN 7991
37	2	4210176	Dop-soettule	
38	1		Doek	

Appendix Twin-tube Oliva® folding arm awning

Piece	Nbr.	Item nbr.	Description	Remark
1	1	6293 320-000	Alu front profile Oliva	
2	1	6293 310-000	Alu bottom cover Oliva	
3	1	6293 300-000	Alu top cover Oliva	
4	1	4211 286-000	Synth. cover front profile, left	In set 4211 292
5	1	4211 288-000	Synth. cover front profile, right	In set 4211 292
6	2	4211 284-000	Synth. cover mountingplate (symmetric)	In set 4211 292
7	2	4211 290-000	Synth. cover wall bracket (symmetric)	In set 4211 292
8	2	4210 185-000	Aurora sticker	
9	1	4211 270-000	Alu top cover support Oliva, left	
10	1	4211 272-000	Alu top cover support Oliva,right	
11	1	4211 266-000	Set mounting plates Oliva	
12	1	421 276-000	Mounting plate 140 mm, left	
13	1	4211 277-000	Mounting plate 140 mm, right	
14	1	4210 256-000	Alu central support Oliva 36 mm	
15	1	4211 780-000	Front profile connector Oliva, Gota, Linea, left	
16	1	4211 782-000	Front profile connector Oliva, Gota, Linea, right	
17	1	4300 600-001	Arm M-plus twisted fork	
18	2	4210 615-000	Arm connector pin excentric stainless	
19	1	420 315-000	Synth. Inlay profile	
20	2	4000 213-000	PVC insert 6x4 mm	
21	4	4000 177-000	Fabric stop + screw complete	
22	1	4211 130-000	Synth. sealing strip	
23	1	6253 026-000	Roller 78	
24	1	4000 909-000	Somfy friction ring serial 50/60 roller 78, synth.	
25	1	4001 140-000	Adaptor model AVZ for roller 78 black	
26	1	4000 840-000	Somfy motor Altus 50 RTS	
27	1	4000 937-000	Somfy motor support serial 50/60	
28	1	4470 080-000	Synth. bearing bung 78	
29	1	4460 050-000	Steel precision bearing 28 mm with anti-dust, for spindle 12 mm	
30	1	4210 497-000	Ring 12,1x20x2 synth.	
31	1	4210 498-000	Bearing pin 12 mm with mounting block	
32	4	4000 225-000	Hexagon tap bolt M8x35 stainless	DIN 933
33	4	4210 529-000	Flat washer not bevelled M8 stainless A2	DIN 125-1 A
34	10	4210 142-000	Hexagon plate screw with Philips head ST 4,2x32 stainless	DIN 7982
35	4	4210 484-000	Stainless screw M6x10 countersunk Philips head	DIN 965
36	2	4210 050-000	Countersunk screw hexagon inside M10x25 RVS	DIN 7991
37	1	4210 176-000	Rushing	
38	1		Cloth	